ALL ELEVATIONS ARE REFERENCED TO NGVD29 VERTICAL DATUM

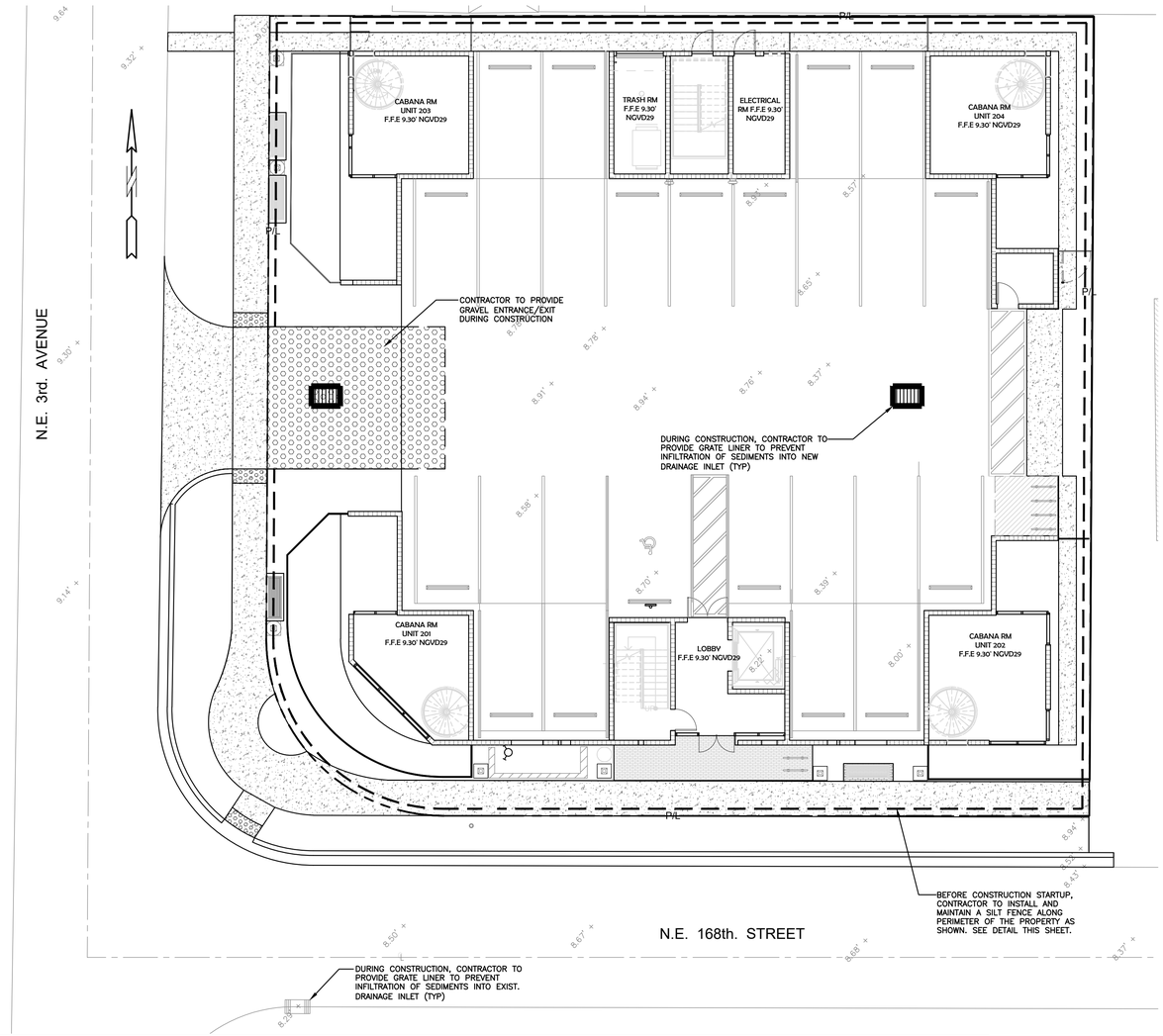

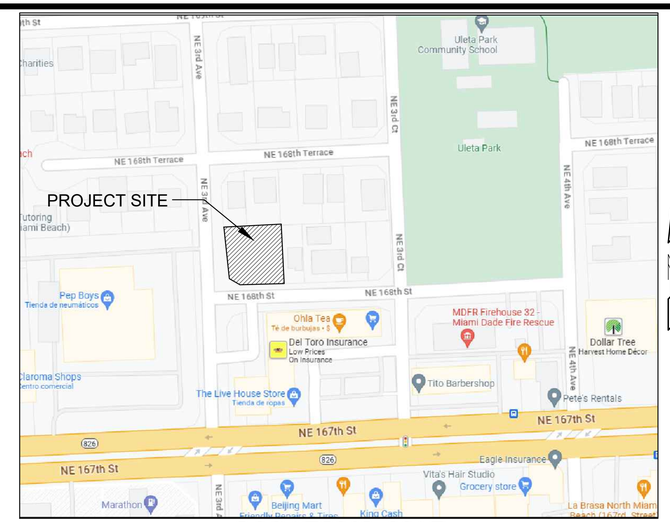

LOCATION MAP

SCALE: N.T.S.

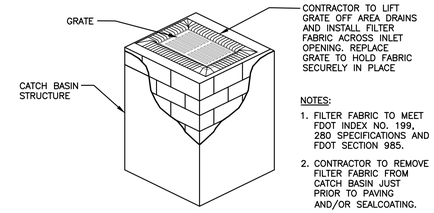

NOTES:

1. FILTER FABRIC TO MEET FDOT INDEX NO. 199, 280 SPECIFICATIONS AND FDOT SECTION 985.
2. CONTRACTOR TO REMOVE FILTER FABRIC FROM CATCH BASIN JUST PRIOR TO PAVING AND/OR SEALCOATING.

POLLUTION PREVENTION FOR CATCH BASIN

N.T.S.

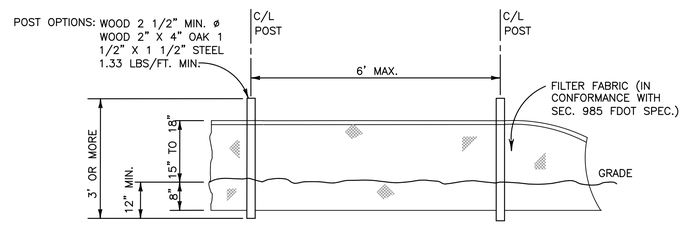

TYPE III SILT FENCE

NTS

BMP NOTES:

1. ALL SEDIMENT CONTROL MEASURES ARE TO BE ADJUSTED TO MEET FIELD CONDITIONS AT THE TIME OF CONSTRUCTION AND BE CONSTRUCTED PRIOR TO ANY GRADING OR DISTURBANCE OF EXISTING SURFACE MATERIAL ON BALANCE OF SITE. PERIMETER SEDIMENT BARRIERS SHALL BE CONSTRUCTED TO PREVENT SEDIMENT OR TRASH FROM FLOWING OR FLOATING ON TO ADJACENT PROPERTIES.

2. PERIODIC INSPECTION AND MAINTENANCE OF ALL SEDIMENT CONTROL STRUCTURES MUST BE PROVIDED TO ENSURE INTENDED PURPOSE IS ACCOMPLISHED. THE DEVELOPER, OWNER AND/OR CONTRACTOR SHALL BE CONTINUALLY RESPONSIBLE FOR ALL SEDIMENT CONTROLS. SEDIMENT CONTROL MEASURES SHALL BE IN WORKING CONDITION AT THE END OF EACH WORKING DAY.

3. SEDIMENT WILL BE PREVENTED FROM ENTERING ANY STORM WATER SYSTEM, DITCH OR CHANNEL. ALL STORMWATER INLETS THAT ARE MADE OPERABLE DURING CONSTRUCTION SHALL BE PROTECTED SO THAT SEDIMENT–LADEN WATER CANNOT ENTER THE CONVEYANCE SYSTEM WITHOUT FIRST BEING FILTERED OR OTHERWISE TREATED TO REMOVE SEDIMENT.

4. WHERE CONSTRUCTION VEHICLE ACCESS ROUTES INTERSECT PAVED PUBLIC ROADS, PROVISIONS SHALL BE MADE TO MINIMIZE THE TRANSPORT OF SEDIMENT BY TRACKING ONTO THE PAVED SURFACE. WHERE SEDIMENT IS TRANSPORTED ONTO A PUBLIC ROAD SURFACE WITH CURBS AND GUTTERS, THE ROAD SHALL BE CLEANED THOROUGHLY AT THE END OF EACH DAY. SEDIMENT SHALL BE REMOVED FROM THE ROADS BY SHOVELING OR SWEEPING AND TRANSPORTED TO A SEDIMENT CONTROL DISPOSAL AREA. STREET WASHING SHALL BE ALLOWED ONLY AFTER SEDIMENT IS REMOVED IN THIS MANNER. THIS PROVISION SHALL APPLY TO INDIVIDUAL SUBDIVISION LOTS AS WELL AS TO LARGER LAND DISTURBING ACTIVITIES.

5. PERMANENT OR TEMPORARY SOIL STABILIZATION SHALL BE APPLIED TO DENUDED AREAS WITHIN SEVEN (7) DAYS AFTER FINAL GRADE IS REACHED ON ANY PORTION OF THE SITE. TEMPORARY SOIL STABILIZATION SHALL BE APPLIED WITHIN SEVEN (7) DAYS TO DENUDED AREAS THAT MAY NOT BE AT FINAL GRADE BUT WILL REMAIN UNDISTURBED FOR LONGER THAN THIRTY (30) DAYS. PERMANENT STABILIZATION SHALL BE APPLIED TO AREAS THAT ARE TO BE LEFT UNDISTURBED FOR MORE THAN ONE YEAR.

6. DURING CONSTRUCTION OF THE PROJECT, SOIL STOCKPILES SHALL BE STABILIZED, COVERED OR CONTAINED WITH SEDIMENT TRAPPING MEASURES. THE CONTRACTOR IS RESPONSIBLE FOR THE TEMPORARY PROTECTION AND PERMANENT STABILIZATION OF ALL SOIL STOCKPILES ON SITE AS WELL AS SOIL INTENTIONALLY TRANSPORTED FROM THE PROJECT SITE.

7. ALL TEMPORARY EROSION AND SEDIMENT CONTROL MEASURES SHALL BE REMOVED WITHIN 30 DAYS AFTER FINAL SITE STABILIZATION OR AFTER THE TEMPORARY MEASURES ARE NO LONGER NEEDED.

8. PROPERTIES AND WATER WAYS DOWNSTREAM FROM CONSTRUCTION SITE SHALL BE PROTECTED FROM SEDIMENT DEPOSITION AND EROSION AT ALL TIMES DURING CONSTRUCTION.

9. CONTRACTOR IS RESPONSIBLE FOR ALL SURFACE WATER DISCHARGES, RAINFALL RUN OFF OR DEWATERING ACTIVITIES.

10. CONTRACTOR MUST INCORPORATE ALL BMP'S NECESSARY TO MEET OR EXCEED STATE WATER QUALITY AND SWPPP REQUIREMENTS.

11. THE POLLUTION PREVENTION PLAN IS A MINIMUM GUIDELINE ONLY. ADDITIONAL BMP'S MAY BE NECESSARY AT CONTRACTOR'S EXPENSE.

LEGEND

- PROPOSED ASPHALT PAVEMENT
- PROPOSED CONC. PAVEMENT
- (8.90) PROPOSED GRADE
- + 10.03' EXISTING ELEVATION

WILFORD ZEPHYR

Digitally signed by WILFORD ZEPHYR
Date: 2024.09.16 17:44:08 -04'00'

THIS ITEM HAS BEEN DIGITALLY SIGNED AND SEALED BY WILFORD ZEPHYR ON THE DATE ADJACENT TO THE SEAL.

PRINTED COPIES OF THIS DOCUMENT ARE NOT CONSIDERED SIGNED AND SEALED AND THE SIGNATURE MUST BE VERIFIED ON ANY ELECTRONIC COPIES.

WILFORD ZEPHYR LICENSE No 76036 STATE OF FLORIDA PROFESSIONAL ENGINEER

9-16-24

EROSION & SEDIMENT CONTROL PLAN

SCALE: 1"=20'

REVISIONS

NO.	DATE	DESCRIPTION

ZEPHYR ENGINEERING
WILFORD ZEPHYR, P.E.
HOLLYWOOD, FL
(786)302-7693
wzephyreng@gmail.com
CA#:31158

NEW RESIDENTIAL DEVELOPMENT
317 NE 168th ST
NORTH MIAMI BEACH, FL 33162

P.E.#:76036

DATE: 10/2/23

SCALE: 1"=10'

SHEET NO.: C1

1 OF 8

PROJECT NO.: 23-46

ALL ELEVATIONS ARE REFERENCED TO NGVD29VERTICAL DATUM

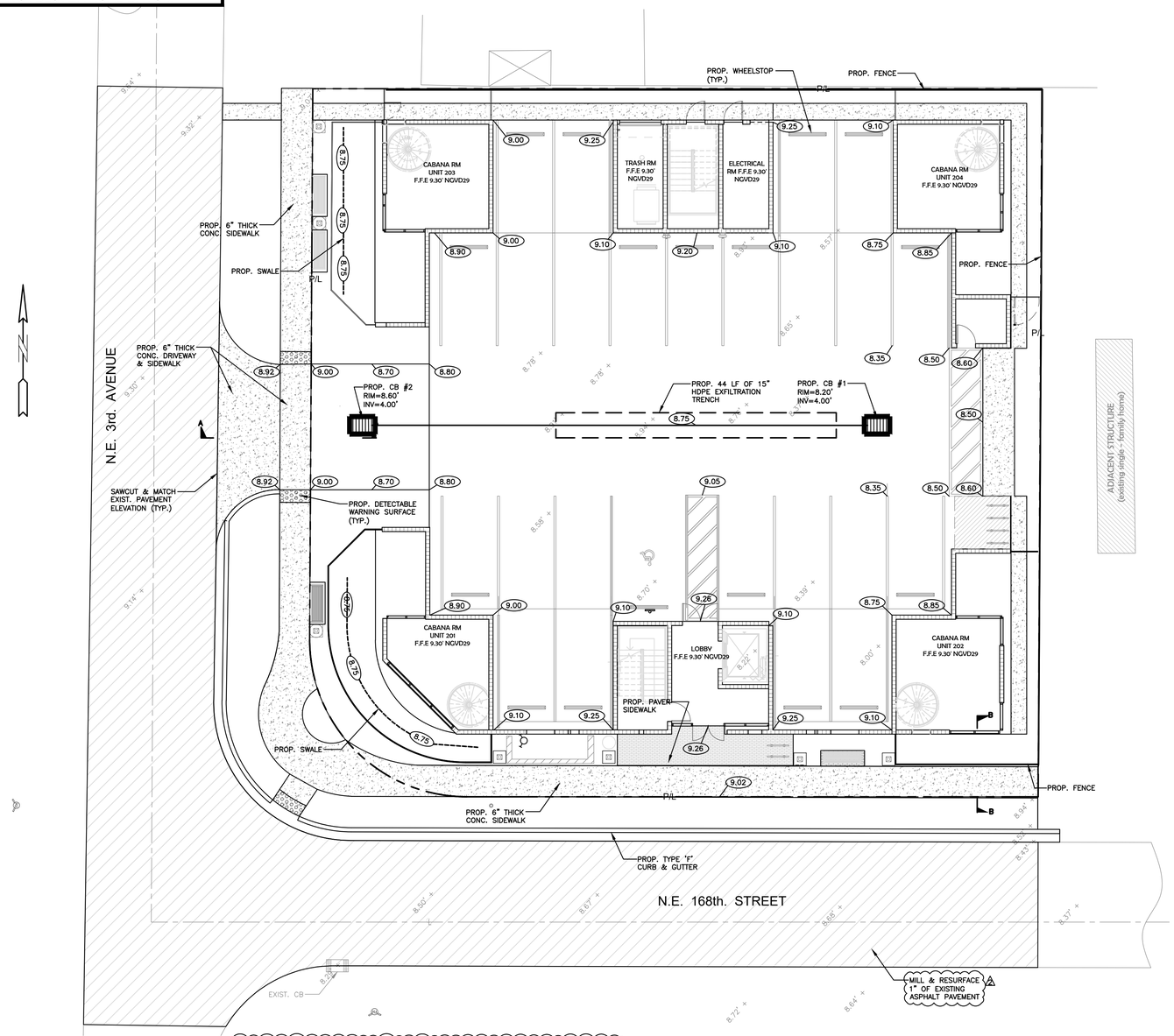

NOTES:

1) CONTRACTOR MUST NOTIFY ZEPHYR ENGINEERING OF THE START OF CONSTRUCTION DATE PRIOR TO START OF CONSTRUCTION. ZEPHYR ENGINEERING WILL NOT CERTIFY ANY CONSTRUCTION THAT WAS NOT INSPECTED BY ZEPHYR ENGINEERING, OR ZEPHYR ENGINEERING'S AUTHORIZED REPRESENTATIVE.
2) PRIOR TO CONSTRUCTION, CONTRACTOR RESPONSIBLE TO FIELD VERIFY ALL EXISTING ELEVATIONS.
3) CONTRACTOR MUST COORDINATE PROPOSED IMPROVEMENTS SHOWN ON CIVIL PLANS WITH EXISTING SITE CONDITIONS & PROPOSED PLANS BY THE OTHER DESIGN PROFESSIONALS PRIOR TO CONSTRUCTION. CONTRACTOR MUST ALSO VERIFY THAT THERE ARE NO DISCREPANCIES BETWEEN THE WATER, SEWER & DRAINAGE PLANS THAT MAY CAUSE CONFLICTS PRIOR TO CONSTRUCTION. CONTACT ZEPHYR ENGINEERING IF DISCREPANCIES EXIST.
4) PRIOR TO CONSTRUCTION, CONTRACTOR RESPONSIBLE TO DOCUMENT EXISTING CONDITIONS ON AND AROUND THE PROJECT AREA, INCLUDING THE R.O.W. AND ADJACENT PROPERTIES. IT'S RECOMMENDED THAT CONTRACTOR TAKE PHOTOGRAPHS & VIDEOS TO CLEARLY DOCUMENT CONDITIONS PRIOR TO CONSTRUCTION. CONTRACTOR RESPONSIBLE TO REPAIR ALL DAMAGES CAUSED BY OR AS A RESULT OF THE PROPOSED CONSTRUCTION.
5) ALL ROOF DRAINS MUST BE CONNECTED TO THE ONSITE DRAINAGE SYSTEM.
6) CONTRACTOR TO REFER TO ARCHITECTURAL PLANS FOR SITE PLAN LAYOUT AND DIMENSIONS.
7) EXISTING UTILITIES SHOWN ARE BASED ON BEST AVAILABLE INFORMATION. CONTRACTOR'S RESPONSIBLE TO FIELD VERIFY LOCATION OF ALL EXISTING UTILITIES PRIOR TO CONSTRUCTION. CONTRACTOR TO BE AWARE THAT THERE MAY BE SOME EXISTING UTILITIES ON OR ADJACENT TO THE PROJECT SITE THAT MAY NOT BE SHOWN ON THE CIVIL PLANS, AND CONTRACTOR IS RESPONSIBLE TO FIELD VERIFY THOSE UTILITIES AS WELL. CONTRACTOR RESPONSIBLE FOR RELOCATION OF EXISTING UTILITIES THAT CONFLICTS WITH PROPOSED CONSTRUCTION.

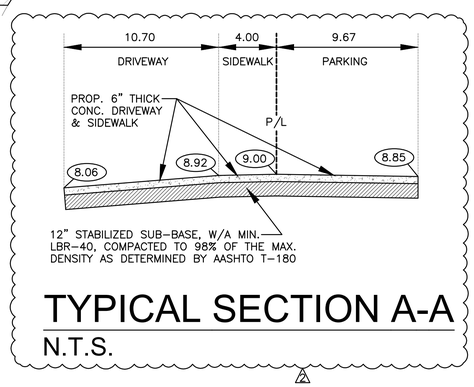

TYPICAL SECTION A-A

N.T.S.

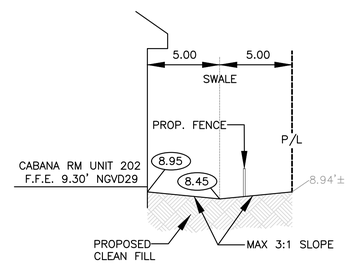

TYPICAL SECTION B-B

N.T.S.

LEGEND

- PROPOSED ASPHALT PAVEMENT
- EXISTING ASPHALT PAVEMENT TO B MILLED & RESURFACED
- PROPOSED CONC. PAVEMENT
- (8.90) PROPOSED GRADE
- + 10.03' EXISTING ELEVATION

WILFORD ZEPHYR Digitally signed by WILFORD ZEPHYR Date: 2024.09.16 17:46:15 -04'00'

THIS ITEM HAS BEEN DIGITALLY SIGNED AND SEALED BY WILFORD ZEPHYR ON THE DATE ADJACENT TO THE SEAL.

PRINTED COPIES OF THIS DOCUMENT ARE NOT CONSIDERED SIGNED AND SEALED AND THE SIGNATURE MUST BE VERIFIED ON ANY ELECTRONIC COPIES.

WILFORD ZEPHYR LICENSE No 76036 STATE OF FLORIDA PROFESSIONAL ENGINEER
9-16-24

PAVING, GRADING & DRAINAGE PLAN

SCALE: 1"=10'

REVISIONS

NO.	DATE	DESCRIPTION
1	7-22-24	CITY COMMENTS
2	9-16-24	CITY COMMENTS

ZEPHYR ENGINEERING
WILFORD ZEPHYR, P.E.
HOLLYWOOD, FL
(786)302-7693
wzephyreng@gmail.com
CA#:31158

NEW RESIDENTIAL DEVELOPMENT
317 NE 168th ST
NORTH MIAMI BEACH, FL 33162

P.E.#:76036
DATE: 10/2/23
SCALE: 1"=10'
SHEET NO.: C2
2 OF 8
PROJECT NO.: 23-46

ALL ELEVATIONS ARE REFERENCED TO NGVD29VERTICAL DATUM

GENERAL CONDITION NOTES :

1. THE LOCATION OF EXISTING UTILITIES AND TOPOGRAPHY HAS BEEN PREPARED FROM THE MOST RELIABLE INFORMATION AVAILABLE TO THE ENGINEER. THIS INFORMATION IS NOT GUARANTEED AND IT IS THE RESPONSIBILITY OF THE CONTRACTOR TO DETER-MINE THE EXACT LOCATION OF ALL EXISTING UTILITIES AND TOPOGRAPHY PRIOR TO CONSTRUCTION.
2. PRIOR TO CONSTRUCTION THE CONTRACTOR IS TO NOTIFY THE FOLLOWING COMPANIES & AGENCIES AND ANY OTHERS SERVING THE AREA:

   FLORIDA POWER & LIGHT CO., CONSTRUCTION
   BELLSOUTH
   COMCAST
   TECO
   LOCAL CITY / COUNTY ENGINEERING & UTILITY DEPARTMENTS
   FLORIDA DEPARTMENT OF TRANSPORTATION (FDOT), AS APPLICABLE
   UNDERGROUND UTILITIES NOIFICATION CENTER OF FLORIDA
   (S.U.N.S.H.I.N.E.)

PAVING, GRADING & DRAINAGE NOTES:

1. ALL UNSUITABLE MATERIALS, SUCH AS MUCK, HARDPAN, ORGANIC MATERIAL & OTHER DELETERIOUS MATERIAL AS CLASSIFIED BY AASHTO M-145, FOUND WITHIN THE ROAD & PARKING LOT AREAS SHALL BE REMOVED DOWN TO ROCK OR SUITABLE MATERIAL, & REPLACED W/ THE SPECIFIED FILL MATERIAL IN MAXIMUM 12" LIFTS COMPACTED TO NOT LESS THAN 100% MAXIMUM DRY DENSITY AT OPTIMUM MOISTURE IN ACCORDANCE W/ AASHTO T-99. THICKNESS OF LAYERS MAY BE INCREASED PROVIDED THE EQUIPMENT & METHODS USED ARE PROVEN BY FIELD DENSITY TESTING TO BE CAPABLE OF COMPACTING THICK LAYERS TO SPECIFIED DENSITIES.
2. ALL AREAS SHALL BE CLEARED & GRUBBED PRIOR TO CONSTRUCTION. THIS SHALL CONSIST OF THE COMPLETE REMOVAL & DISPOSAL OF ALL TREES, BRUSH, STUMPS, ROOTS, GRASS, WEEDS, RUBBISH & ALL OTHER OBSTRUCTION RESTING ON OR PROTRUDING THROUGH THE SURFACE OF THE EXIST. GROUND TO A DEPTH OF 12". ITEMS DESIGNATED TO REMAIN OR TO BE RELOCATED OR ADJUSTED SHALL BE SO DESIGNATED ON THE DWGS.
3. FILL MATERIAL SHALL BE CLASSIFIED AS A-1, A-3 OR A-2.4 IN ACCORDANCE W/ AASHTO M-145 & SHALL BE FREE FROM VEGETATION & ORGANIC MATERIAL. NOT MORE THAN 12% BY WEIGHT OF FILL MATERIAL SHALL PASS THE NO. 200 SIEVE.
4. THE CONTRACTOR SHALL BE RESPONSIBLE FOR PROVIDING CERTIFIED MATERIAL TEST RESULTS TO THE ENGINEER OF RECORD PRIOR TO THE RELEASE OF FINAL CERTIFICATION BY THE ENG. TEST RESULTS MUST INCLUDE BUT MAY NOT BE LIMITED TO, DENSITIES FOR SUBGRADE & LIME ROCK, UTILITIES, EXCAVATION, ASPHALT GRADIATION REPORTS, CONC. CYLINDERS, ETC...
5. ALL INLETS & PIPE SHALL BE PROTECTED DURING CONSTRUCTION TO PREVENT SILTATION IN THE DRAINAGE SYSTEMS BY WAY OF TEMPORARY PLUGS & PLYWOOD OR PLASTIC COVERS OVER THE INLETS. THE ENTIRE DRAINAGE SYSTEM TO BE CLEAN OF DEBRIS PRIOR TO FINAL ACCEPTANCE.
6. WHERE NEW ASPHALT MEETS OR ABUTS EXIST. ASPHALT, THE EXIST. ASPHALT SHALL BE SAWCUT TO PROVIDE A STRAIGHT EVEN LINE. PRIOR TO REMOVING CURB OR GUTTER, THE ADJACENT ASPHALT SHALL ALSO BE SAWCUT TO PROVIDE A STRAIGHT EVEN LINE.
7. ALL PROPOSED GRADES (ELEVATIONS) REFER TO ASPHALT GRADES UNLESS INDICATED OTHERWISE.
8. SITE GRADING SHALL BE W/IN 0.1' OF THE REQUIRED ELEVATION & ALL AREAS SHALL BE GRADED TO DRAIN.
9. ALL SUBGRADE SHALL HAVE AN LBR OF 40 UNLESS OTHERWISE NOTED & SHALL BE COMPACTED TO 98% MAXIMUM DRY DENSITY PER AASHTO T-99.
10. ALL LIMEROCK SHALL BE COMPACTED TO 98% PER AASHTO T-180 & HAVE NOT LESS THAN 60% OF CARBONATES OF CALCIUM & MAGNESIUM UNLESS OTHERWISE DESIGNATED. ALL LIMEROCK SHALL BE PRIMED.
11. CONCRETE & ASPHALT THICKNESS SHALL BE OF TYPE DESIGNATED ON DWGS. (SEE SECTIONS)
12. PLASTIC FILTER FABRIC SHALL BE MIRAFI, TYPAR OR EQUAL CONFORMING TO SECTION 985 OF THE FDOT STANDARD SPECIFICATIONS.
13. CONC. SIDEWALKS SHALL BE 4" THICK ON COMPACTED SUBGRADE, W/ 1/2" EXPANSION JOINTS PLACED AT A MAXIMUM OF 75'. CRACK CONTROL JOINTS SHALL BE 5' ON CENTER. THE BACK OF SIDEWALK ELEVATION SHALL EQUAL THE CROWN OF ROADWAY, UNLESS SPECIFIED OTHERWISE BY LOCAL CODES OR INDICATED ON DWGS. ALL CONC. SIDEWALKS THAT CROSS DRIVEWAYS SHALL BE 6" THICK.
14. PIPE SPECIFICATIONS : THE MATERIAL TYPE IS SHOWN ON THE DRAWINGS BY ONE OF THE FOLLOWING DESIGNATIONS –

    RCP = REINFORCED CONC. PIPE, ASTM DESIGNATION C-76, TABLE III
    CMP = CORRUGATED METAL (ALUM.) PIPE, TM DESIGNATION M-196
    CMP = (SMOOTH LINED) CORRUGATED METAL (ALUM.) PIPE, ASTM DESIGNATION M-196
    SCP = SLOTTED CONC. PIPE, FDOT SECTIONS 941 & 942
    PVC = POLYVINYLCHLORIDE PIPE
    PCMP = PERFORATED CMP, FDOT SECTION 945
    DIP = DUCTILE IRON PIPE
    HDPE = HIGH DENSITY POLYETHYLENE PIPE.

15. ASPHALT –

    BITUMINOUS MATERIAL SHALL BE ASPHALT CEMENT, VISCOSITY GRADE AC-20, CONFORMING TO THE REQUIREMENTS OF FDOT STANDARD SPECIFICATIONS, 1986 EDITION, SECTION 916-1.

    PRIME COAT SHALL BE CUT BACK ASPHALT, GRADE RC-70 OR RC-250 CONFORMING TO THE REQUIREMENTS SPECIFIED IN AASHTO DESIGNATION M-81-75 (1982). RATE – 0.10 GALS./S.Y. TACK COAT SHALL BE EMULSIFIED ASPHALT, GRADE RS-2 CONFORMING TO THE REQUIREMENTS SPECIFIED IN AASHTO DESIGNATION M-140-82. RATE – 0.02 TO 0.08 GALS/S.Y.

DESIGN MIX SHALL CONFORM TO FDOT SECTION 331 UNLESS OTHERWISE SPECIFIED.

PAVEMENT MARKING & SIGNING STANDARD NOTES :

1. STOP SIGNS SHALL BE 30"x30" (R1-1), HIGH INTENSITY.
2. ALL SIGNS SHALL BE PLACED AT A HEIGHT NOT LESS THAN 5' & NOT GREATER THAN 7', THE HEIGHT IS MEASURED FROM THE BOTTOM OF THE SIGN TO THE EDGE OF NEAREST PAVEMENT. THE SIGN POST SHALL BE PLACED A MINIMUM OF 6' TO A MAXIMUM OF 12' FROM THE ADJACENT PAVEMENT, & A MINIMUM OF 6' FROM THE CROSS TRAFFIC PAVEMENT.
3. STOP BARS SHALL BE 24" WHITE.
4. ALL SITE PAVEMENT MARKINGS SHALL BE PAINT. (UNLESS INDICATED OTHERWISE)
5. ALL PAVEMENT MARKINGS AND SIGNAGE IN THE ROAD RIGHT-OF-WAY SHALL BE THERMOPLASTIC & SHALL CONFORM TO MUTCD AND PBC TYPICAL T-P-06-001.

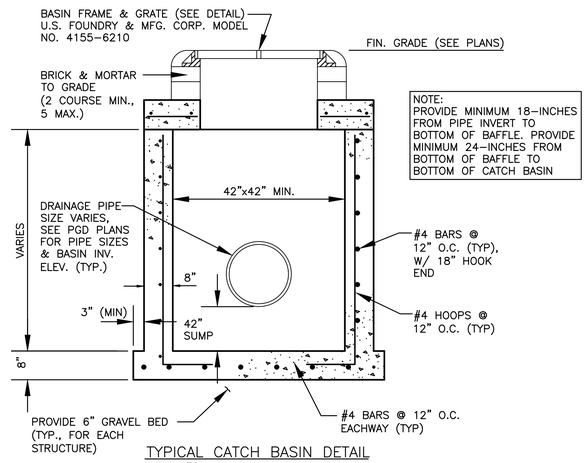

TYPICAL CATCH BASIN DETAIL
NTS

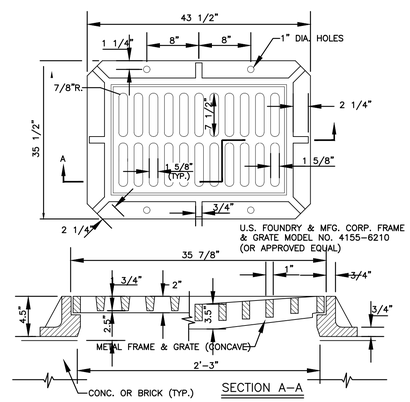

FRAME & GRATE DETAIL
NTS

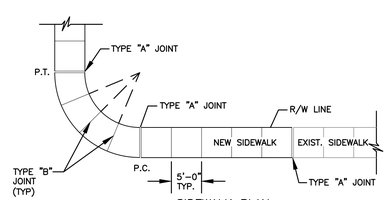

SIDEWALK PLAN
N.T.S.

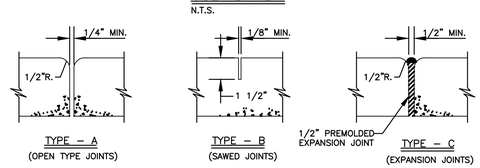

TYPE – A (OPEN TYPE JOINTS)
TYPE – B (SAWED JOINTS)
TYPE – C (EXPANSION JOINTS)

SIDEWALK JOINTS
N.T.S.

TYPICAL SIDEWALK THICKNESS (T)

LOCATION :	"T"
PEDESTRIAN AREAS	4"
DRIVEWAYS & OTHER	6"

TABLE OF SIDEWALK JOINTS

TYPE	LOCATION :
"A"	P.C. & P.T. OF CURVES & TIE-IN JUNCTION OF EXIST. TO NEW SIDEWALKS.
"B"	5'-0" O.C. ON SIDEWALKS.
"C"	* WHERE SIDEWALK ABUTS CONC. CURBS & DRIVEWAYS OR SIMILIAR STRUCTURES. EXPANSION JOINTS EVERY 50' O.C.

* INSTALLED AT THE DISCRETION OF THE ENGINEER

NOTES:
1. EXPANSION JOINTS EVERY 50' O.C.
2. CONC. MIN. 2500 PSI, NO STEEL IN SIDEWALK
3. 8" THK. SIDEWALK ACROSS DRIVEWAYS

SIDEWALK DETAIL
NTS

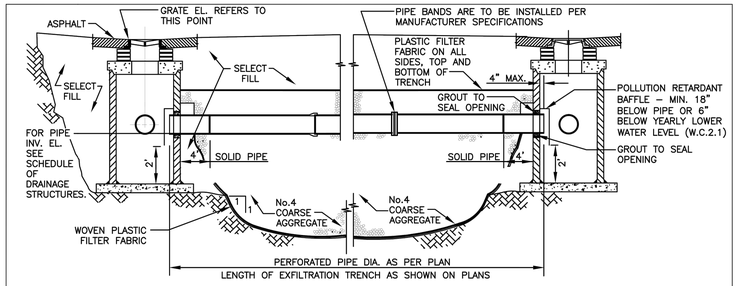

LONGITUDINAL SECTION

NOTE
1–AFTER THE COARSE AGGREGATE HAS BEEN PLACED TO THE PROPER ELEVATION IT SHALL BE CAREFULLY WASHED DOWN WITH CLEAN WATER, OR TAMPERED, TO ALLOW FOR INITIAL SETTLEMENT THAT MAY OCCUR. IF SETTLEMENT DOES TAKE PLACE, ADDITIONAL No.4 COARSE AGGREGATE SHALL BE ADDED TO RESTORE THE PROPER ELEVATION SO THAT THE EXFILTRATION TRENCH IS COMPLETED IN ACCORDANCE WITH THE DETAILS.

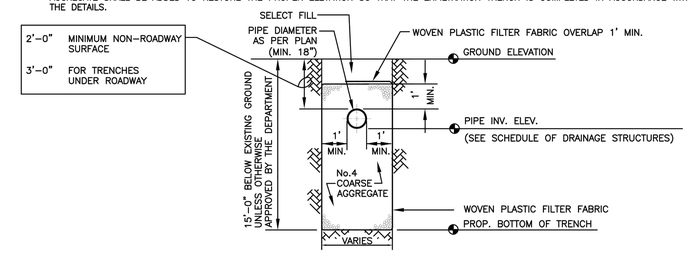

TRANSVERSE SECTION

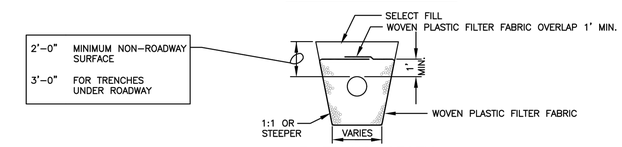

ALT. TRANS. SECTION*

* MAY BE USED IN AREAS WHERE TRENCH WALLS WILL NOT STAND VERTICAL, OR WHERE CAVE-IN BELOW THE WATER TABLE IS LIKELY TO, OCCUR. TO BE USED AT THE ENGINEER'S DISCRETION.

NOTES (CONTINUED ON NEXT PAGE)
1. PLASTIC FILTER FABRIC SHALL BE WOVEN MONOFILAMENT POLYPROPYLENE GEOTEXTILE. PERMITTIVITY SHALL BE GREATER THAN 0.50 SEC AND FLOW RATE GREATER OR EQUAL TO 50 gal/min.
2. MAXIMUM EXFILTRATION RATE WHICH CAN BE USED IN CALCULATING FRENCH DRAIN LENGTH IS 0.1 cfs/lf.

MIAMI-DADE COUNTY DEPARTMENT OF TRANSPORTATION AND PUBLIC WORKS	APPROVED 04/16/2015	REVISED 02/08/2011 09/26/2012 10/19/2012	STANDARD STORM DRAINAGE DETAIL EXFILTRATION TRENCH (FRENCH DRAIN)	SD 1.1 SHEET 1 OF 2

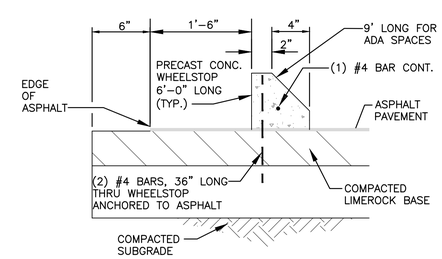

CONCRETE WHEELSTOP DETAIL
NTS

WILFORD ZEPHYR
Digitally signed by WILFORD ZEPHYR
Date: 2024.09.16 17:47:57 -04'00'

THIS ITEM HAS BEEN DIGITALLY SIGNED AND SEALED BY WILFORD ZEPHYR ON THE DATE ADJACENT TO THE SEAL.

PRINTED COPIES OF THIS DOCUMENT ARE NOT CONSIDERED SIGNED AND SEALED AND THE SIGNATURE MUST BE VERIFIED ON ANY ELECTRONIC COPIES.

WILFORD ZEPHYR LICENSE No 76036 STATE OF FLORIDA PROFESSIONAL ENGINEER
9-16-24

CIVIL DETAILS I
NTS

REVISIONS

NO.	DATE	DESCRIPTION

ZEPHYR ENGINEERING
WILFORD ZEPHYR, P.E.
HOLLYWOOD, FL
(786)302-7693
wzephyreng@gmail.com
CA#:31158

NEW RESIDENTIAL DEVELOPMENT
317 NE 168th ST
NORTH MIAMI BEACH, FL 33162

P.E.#:76036
DATE: 10/2/23
SCALE: N.T.S.
SHEET NO.: C3
3 OF 8
PROJECT NO.: 23-46

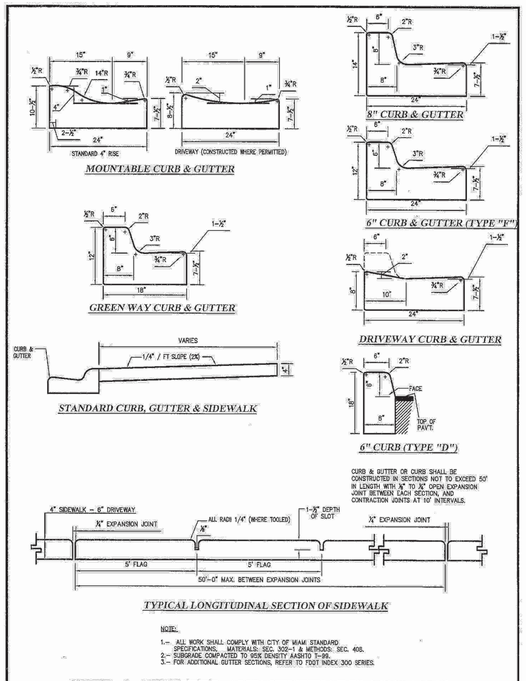

CURB & GUTTTER AND SIDEWALK DETAILS

	N.T.S.		Oct. 1962
DR: MA	DEPARTMENT OF PUBLIC WORKS	R-14	MISC. 35-85-22
CK:	CITY OF MIAMI, FLORIDA		Sheet 1 of 10

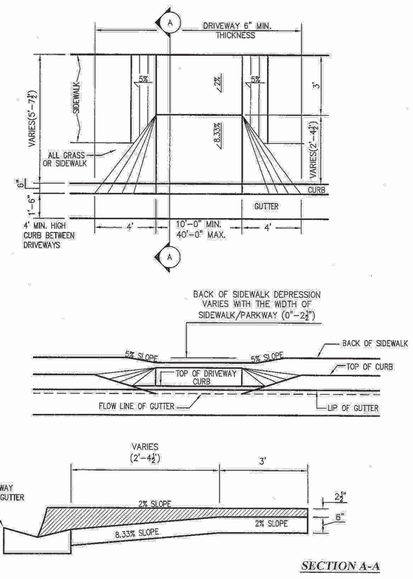

STANDARD DRIVEWAY DETAILS FOR SIDEWALK/PARKWAY LESS THAN 7'-6" IN WIDTH

	N.T.S.		Nov. 2007
DR: MA	DEPARTMENT OF PUBLIC WORKS		MISC. 35-85-22
CK:	CITY OF MIAMI, FLORIDA		Sheet 2 of 10

SWALE CONSTRUCTION REQUIREMENTS

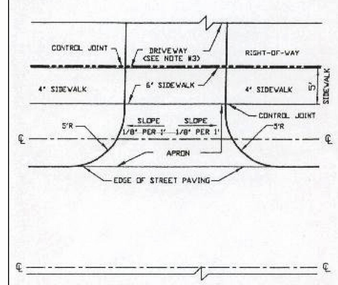

SIDEWALKS:

1. SIDEWALKS SHALL BE CONCRETE 4" THICK EXCEPT ACROSS DRIVEWAYS WHERE THEY WILL BE 6" THICK WITH 10X10-W6XW6 ROAD MESH (SEE NOTE #2).

APRONS:

1. APRONS SHALL BE 6' CONCRETE WITH 10X10-W6XW6 WIRE MESH (SEE NOTE #2) OR 6" COMPACTED ROAD WITH ROCK WITH 1 1/2" ASPHALT SURFACE.
2. APRONS SHOULD BE SLOPED TO DRAIN TO PERVIOUS SOD AREA AND NOT TO STREET.

GRASS SWALES:

1. UNDER ALL DRIVEWAY PERMITS GRASS SWALE MUST BE GRADED, PER CITY SPECIFICATIONS, AND SODDED (SEE NOTE #1).
2. IF SOD AREA IS DEEMED INSUFFICIENT FOR STORM WATER CRITERIA AND LOCAL CONDITIONS ADDITIONAL SUBSURFACE DRAINAGE SHALL BE PROVIDED (E.G. FRENCH DRAIN).

DRIVEWAYS:

1. MINIMUM OF 4" CONCRETE WITH 10X10-W6XW6 WIRE MESH (SEE NOTE #2) OR 1" ASPHALT OVER COMPACTED ROCK.

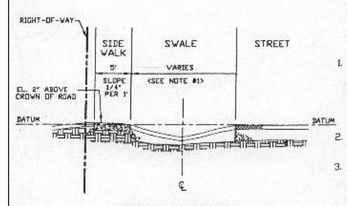

TYPICAL SECTION

NOTE:

1. DEPTH OF APRON IS BASED ON SLOPE OF 1/4" PER FOOT OF WIDTH FROM EDGE OF STREET TO TOP OF DRIVEWAY WHEN INSTALLED ; DEPTH OF GRASS SWALE IS BASED ON SLOPE OF 1/2" PER FOOT OF WIDTH FROM EDGE OF STREET TO TOP OF SOD WHEN INSTALLED.
2. ALL CONCRETE MUST BE 3000 psi WITH CONTROL JOINT 20 FT ON CENTER.
3. DRIVEWAY MUST BE SLOPED TO DRAIN TO PERVIOUS AREA (GRASS) INSIDE PROPERTY AND NOT TO CITY'S RIGHT-OF-WAY.

1/2 w/o 2 CAD: DRIVEWAY

WILFORD ZEPHYR Digitally signed by WILFORD ZEPHYR Date: 2024.09.16 17:48:15 -04'00'

THIS ITEM HAS BEEN DIGITALLY SIGNED AND SEALED BY WILFORD ZEPHYR ON THE DATE ADJACENT TO THE SEAL.

PRINTED COPIES OF THIS DOCUMENT ARE NOT CONSIDERED SIGNED AND SEALED AND THE SIGNATURE MUST BE VERIFIED ON ANY ELECTRONIC COPIES.

WILFORD ZEPHYR LICENSE No 76036 STATE OF FLORIDA PROFESSIONAL ENGINEER

9-16-24

CIVIL DETAILS II
NTS

REVISIONS

NO.	DATE	DESCRIPTION
1	9-16-24	CITY COMMENTS

ZEPHYR ENGINEERING
WILFORD ZEPHYR, P.E.
HOLLYWOOD, FL
(786)302-7693
wzephyreng@gmail.com
CA#-31158

NEW RESIDENTIAL DEVELOPMENT
317 NE 168th ST
NORTH MIAMI BEACH, FL 33162

P.E.#:76036
DATE: 10/2/23
SCALE: N.T.S.
SHEET NO.: C4
4 OF 8
PROJECT NO.: 23-46

ALL ELEVATIONS ARE REFERENCED TO NGVD29 VERTICAL DATUM

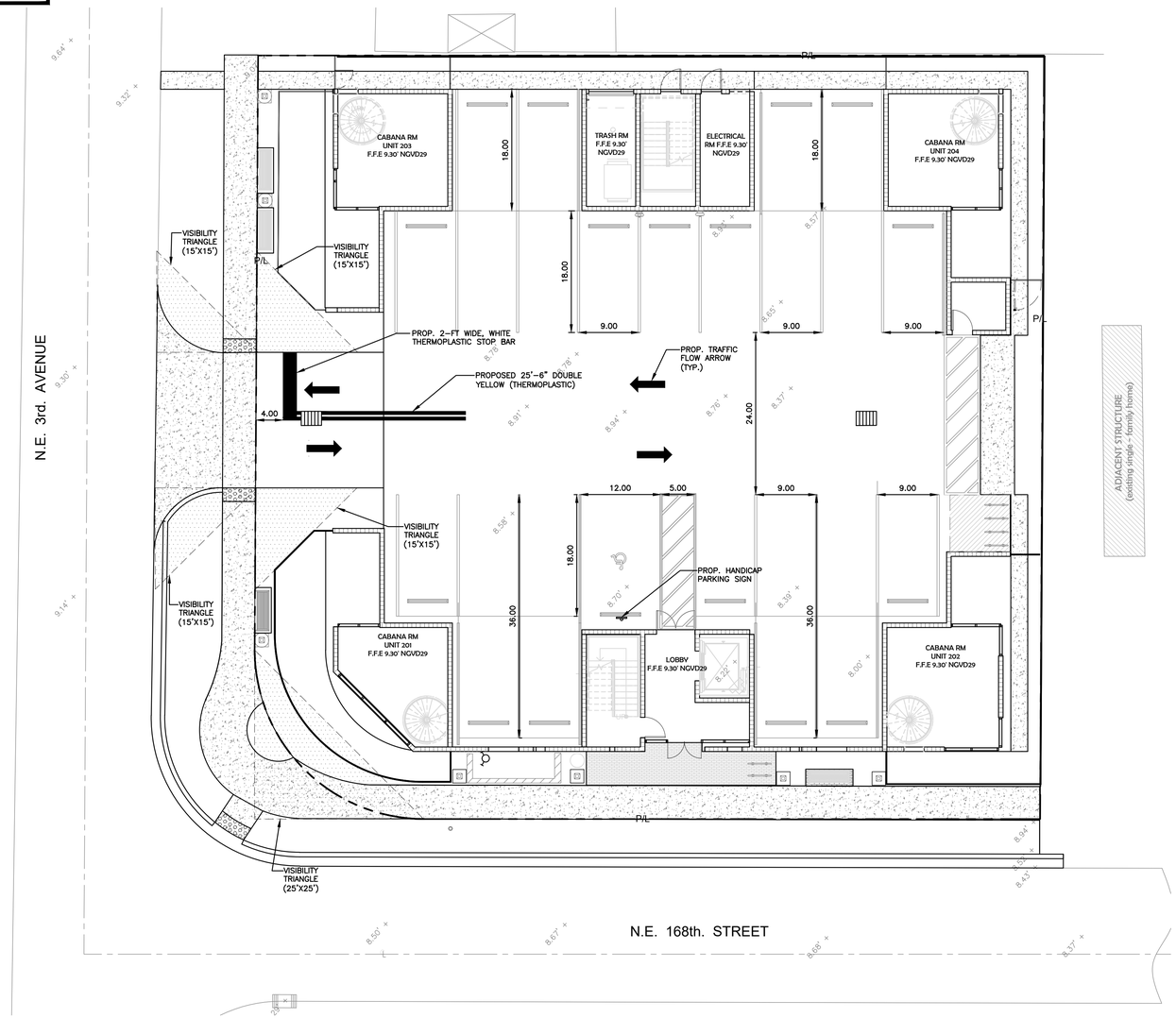

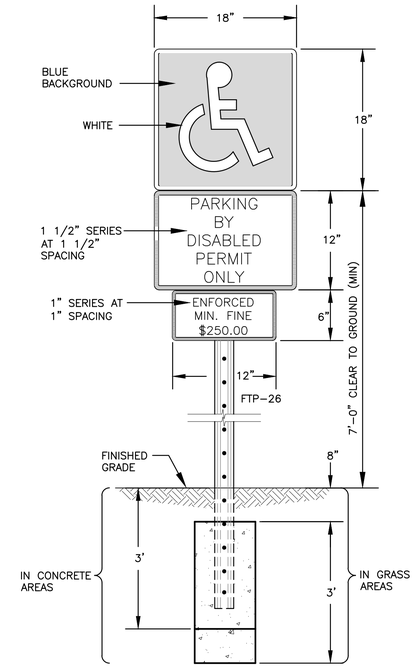

FTP-26 HANDICAP PARKING SIGN WITH SUPPLEMENTAL 12" x 6" "MINIMUM FINE $250.00" SIGN

NOTES:

1. TOP PORTION OF SIGN SHALL HAVE A REFLECTORIZED BLUE BACKGROUND.
2. BOTTOM PORTION OF SIGN SHALL HAVE A REFLECTORIZED WHITE BACKGROUND WITH BLACK OPAQUE LEGEND AND BORDER.
3. LOCATE SIGN AT CENTERLINE AND HEAD OF EACH HANDICAP PARKING STALL, WHERE APPLICABLE.

HANDICAP PARKING SIGN DETAIL

NTS

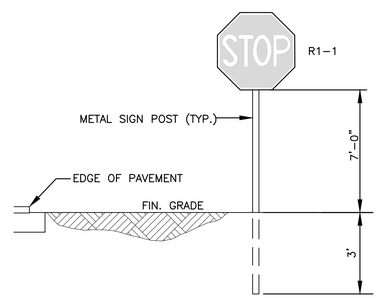

TYPICAL SIGN INSTALLATION DETAIL

NTS

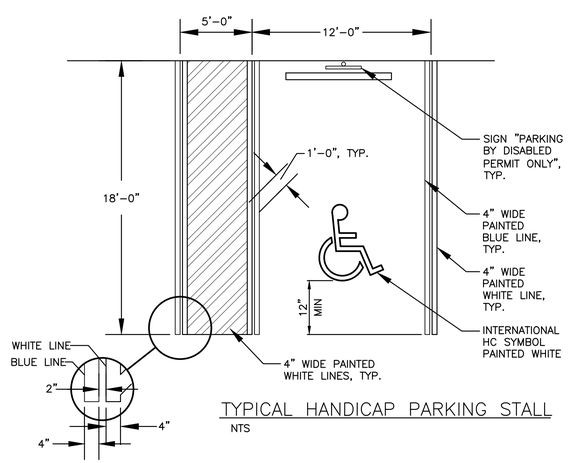

TYPICAL HANDICAP PARKING STALL

NTS

LEGEND

- PROPOSED ASPHALT PAVEMENT
- PROPOSED CONC. PAVEMENT
- 8.90 PROPOSED GRADE
- + 10.03' EXISTING ELEVATION

WILFORD ZEPHYR

Digitally signed by WILFORD ZEPHYR
Date: 2024.09.16 17:48:33 -04'00'

THIS ITEM HAS BEEN DIGITALLY SIGNED AND SEALED BY WILFORD ZEPHYR ON THE DATE ADJACENT TO THE SEAL.

PRINTED COPIES OF THIS DOCUMENT ARE NOT CONSIDERED SIGNED AND SEALED AND THE SIGNATURE MUST BE VERIFIED ON ANY ELECTRONIC COPIES.

WILFORD ZEPHYR LICENSE No 76036 STATE OF FLORIDA PROFESSIONAL ENGINEER
9-16-24

PAVEMENT MARKINGS & SIGNAGE PLAN

SCALE: 1"=10'

REVISIONS

NO.	DATE	DESCRIPTION

ZEPHYR ENGINEERING
WILFORD ZEPHYR, P.E.
HOLLYWOOD, FL
(786)302-7693
wzephyreng@gmail.com
CA#:31158

NEW RESIDENTIAL DEVELOPMENT
317 NE 168th ST
NORTH MIAMI BEACH, FL 33162

P.E.#:76036

DATE: 10/2/23

SCALE: 1"=10'

SHEET NO.: C5
5 OF 8

PROJECT NO.: 23-46

ALL ELEVATIONS ARE REFERENCED TO NGVD29 VERTICAL DATUM

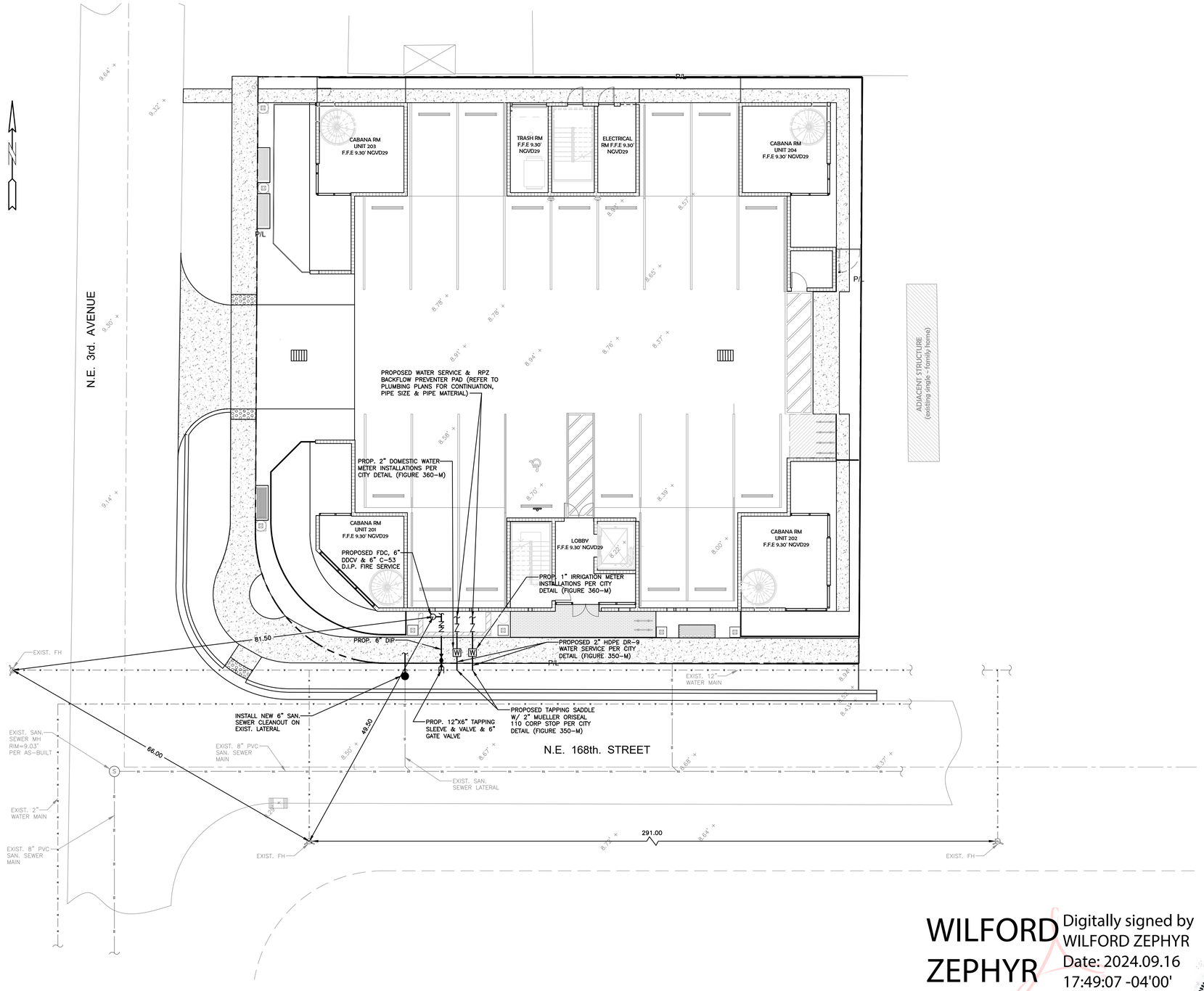

LEGEND

- PROPOSED ASPHALT PAVEMENT
- PROPOSED CONC. PAVEMENT
- (8.90) PROPOSED GRADE
- + 10.03' EXISTING ELEVATION

WILFORD ZEPHYR

Digitally signed by WILFORD ZEPHYR
Date: 2024.09.16 17:49:07 -04'00'

THIS ITEM HAS BEEN DIGITALLY SIGNED AND SEALED BY WILFORD ZEPHYR ON THE DATE ADJACENT TO THE SEAL.

PRINTED COPIES OF THIS DOCUMENT ARE NOT CONSIDERED SIGNED AND SEALED AND THE SIGNATURE MUST BE VERIFIED ON ANY ELECTRONIC COPIES.

WILFORD ZEPHYR LICENSE No 76036 STATE OF FLORIDA PROFESSIONAL ENGINEER

9-16-24

WATER & SEWER PLAN

SCALE: 1"=10'

REVISIONS

NO.	DATE	DESCRIPTION
1	7-22-24	CITY REVIEW COMMENTS

ZEPHYR ENGINEERING
WILFORD ZEPHYR, P.E.
HOLLYWOOD, FL
(786)302-7693
wzephyreng@gmail.com
CA#:31158

NEW RESIDENTIAL DEVELOPMENT
317 NE 168th ST
NORTH MIAMI BEACH, FL 33162

P.E.#:76036
DATE: 10/2/23
SCALE: 1"=10'
SHEET NO.: C6
6 OF 8
PROJECT NO.: 23-46

NOTES:
1. PRIOR TO BEGINNING ANY WORK, CONTRACTOR SHALL CONTACT ALL UTILITY COMPANIES THAT HAVE FACILITIES WITHIN THE CITY'S SERVICE AREA.
2. THE ABOVE STICKER SHALL APPEAR ON THE COVER SHEET OF ALL CONSTRUCTION PLANS SUBMITTED TO NMB WATER.
3. COMPLY WITH MIAMI–DADE COUNTY WHITE LINING ORDINANCE.

Date	Revisions	Appr. by	NMB WATER CITY OF NORTH MIAMI BEACH		
			UTILITY LOCATIONS		
			Date: July 2019	Scale: N.T.S.	Fig: 200

5/8" TO 2" DOMESTIC AND IRRIGATION METER INSTALLATION REQUIREMENTS AND PROCEDURE

1. All work must be done by an insured contractor with an Underground Contractors License or a Licensed Master Plumber.
2. The contractor and **not the purveyor** (City of North Miami Beach) shall be responsible for all the work from the tap or connection to the water main, to the installation of service line, meter box and approved backflow device, according to the City of North Miami Beach (CNMB) standard detail numbers 325, 325-A, 330, 350, 355, 360, 361 & 363 (see attached). Preferably, the contractor shall process the necessary permits for the job. Copies of insurance and license are required together with the permit application.
3. Call Sunshine One Call (1-800-432-4770) for locations. Get a ticket number which is needed when filling out the Installation Authorization Form.
4. Once the location is marked, draw a plan or a sketch of the proposed work. Indicate the location of the jobsite and orientation of the drawing to the North. Label the size and made of all the fittings, approved devices, and piping to be used. Installation must conform with the CNMB standards. Additional information such as as-built drawings are available at the CNMB Public Services Bldg., Engineering Department at 17050 N.E. 19 Avenue, North Miami Beach, Florida 33162.
5. Check with concerned municipalities (Aventura, Miami-Dade County, Sunny Isles Beach, Golden Beach, Miami Gardens or North Miami Beach) about their Public Works and Plumbing permit requirements or with FDOT if proposed work involves FDOT roadways and sidewalks. For 2" meter or services a Health Department permit is required. Secure the proper permits, these will be required prior to the release of meter.
6. For a new construction, or an increase in area of an existing building or landscaping as in the case of a renovation, submit two (2) sets of building plan or landscaping plan or both together with DRER and MDWASD receipts for review and assessment of impact fees as required. Contact DRER and MDWASD for requirements to get this receipts. Payment of impact fees will be collected.
7. Fill out the Installation Authorization Form completely. Submit the Installation Authorization Form together with the plan at the CNMB Engineering Department for approval.
8. When the Installation Authorization is approved, payment for the meter installation and the meter deposit fees (see attached) will be collected and a meter spacer will be issued to be temporarily used during plumbing installation.
9. All payments must be made at the Engineering Department, on the first floor of the CNMB public Services Building at 17050 NE 19 Avenue, North Miami Beach, Florida and all checks must be made payable to the City of North Miami Beach.
10. Call (305) 948-2967 ext. 7985 at least 72 hours prior to schedule the tapping of the water main. A CNMB inspector must be present to witness the tap.
11. Upon approval of tapping inspection, using the meter spacer, install the plumbing, approved backflow device and supports, meter box and concrete collar, etc., to complete the installation.
12. Call (305) 948-2967 ext. 7985 for final installation inspection.
13. Upon approval of final installation inspection, submit a Release of Lien and whatever outstanding requirements, for the meter to be released.
14. Upon submission of all the requirements a work order for a new meter installation will be issued to the CNMB Meter Department for the installation of the new meter.
15. Meter Department crew will remove spacer, install the new meter and test to certify the backflow device.
16. The original copy of the installation work order with the designated meter number, size and location of meter will be sent to the customer service and an account will be created for billing.

Should you have any question, please call (305) 948-2967, ext.7985.

I understand the above information and have been given copies of the standard details and meter fees.

Print Name _____ Signature _____

Property Address:

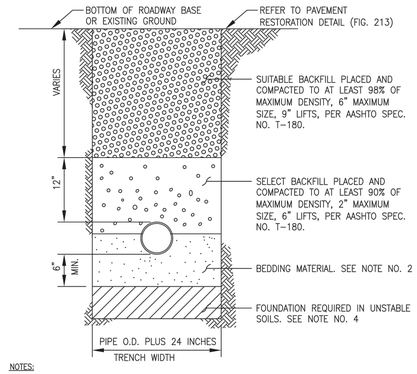

NOTES:
1. FOR EXCAVATION, TEMPORARY AND PERMANENT, BACKFILL AROUND MANHOLES, APPURTENANCES, OR IN WATER, REFER TO PROVISIONS WITHIN THE SPECIFICATIONS.
2. UNLESS OTHERWISE SPECIFIED, BEDDING MATERIAL SHALL CONSIST OF SELECT BACKFILL MATERIAL 2" MAX. SIZE, OR WASHED AND GRADED LIMEROCK (3/8" – 7/8"), COMPACTED TO AT LEAST 95% OF MAX. DENSITY, 6" LIFTS, PER AASHTO SPEC. NO. T–180.
3. WHERE REQUIRED, SHEETING AND SHORING SHALL BE IN ACCORDANCE WITH SPECIFICATION.
4. WHERE UNSTABLE SOILS ARE ENCOUNTERED, INCLUDING PEAT, MUCK OR OTHER ORGANIC SOILS, ELASTIC SILT AND CLAYS, A FOUNDATION IS REQUIRED, COMPACTED TO AT LEAST 95% OF MAX. DENSITY, 6" LIFTS PER AASHTO SPEC. NO. T–180. FOUNDATION MATERIAL SHALL BE SELECT BACKFILL MATERIAL, 2" MAXIMUM SIZE, 6" LIFTS. EXTEND EXCAVATION UNTIL A SUITABLE MATERIAL IS FOUND.
5. IN A LOW PRESSURE SEWER SYSTEM USE SAND OR 1/4" RICE ROCK FOR SELECT BEDDING AND 12" SELECT BACKFILL MATERIAL AS SHOWN ABOVE. MINIMUM 36" OF COVER.

Revisions	Appr. by	NMB WATER OF THE CITY OF NORTH MIAMI BEACH		
		TYPICAL TRENCH BACKFILL		
		Date: July 2019	Scale: N.T.S.	Fig: 212

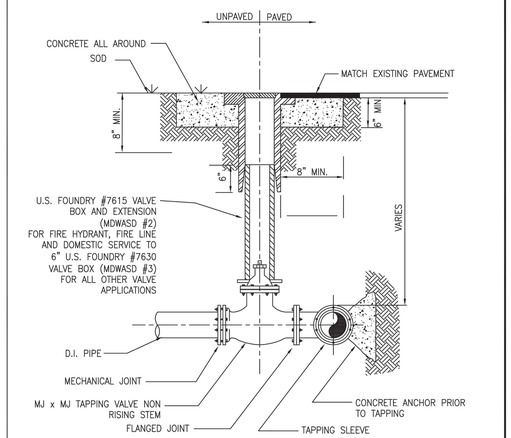

NOTES
1. STAINLESS STEEL M.J. TAPPING SLEEVES SHALL BE USED FOR C.I OR D.I PIPE, WHEN MAKING A FULL DIAMETER TAP. WHERE THE TAP IS LESS THAN THE DIAMETER OF THE EXISTING MAIN, A STAINLESS STEEL SLEEVE MAY BE USED. CAST IRON SLEEVES SHALL BE USED ONLY FOR ASBESTOS CEMENT TAPS.
2. TAP SLEEVE TO BE ROMAC STAINLESS STEEL STYLE (SST) OR JCM 432 PLASTIC PIPE.
3. WHEN TAPPING INTO A FORCE MAIN, AFTER COMPLETION OF THE TAPPING OPERATION, A PLUG VALVE SHALL BE INSTALLED AFTER THE TAPPING VALVE.

Date	Revisions	Appr. by	NMB WATER OF THE CITY OF NORTH MIAMI BEACH		
			TYPICAL TAPPING VALVE SETTING (16" AND SMALLER)		
			Date: July 2019	Scale: N.T.S.	Fig: 216

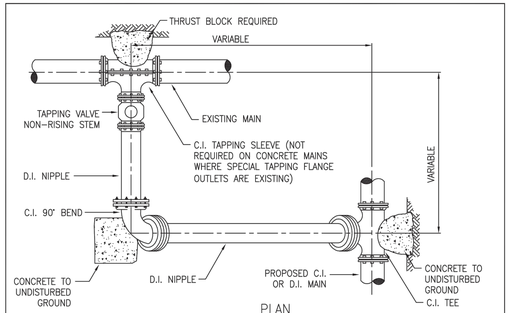

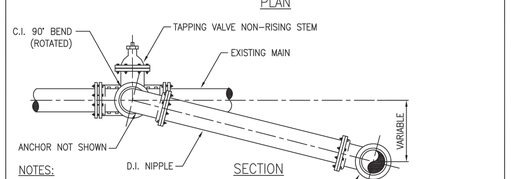

NOTES:
1. TAPPING SLEEVE TO BE CAST IRON STEEL WHEN TAPPING ASBESTOS CEMENT PIPE. STAINLESS STEEL SLEEVE SHALL BE ROMAC STYLE SST OR JCM 432.
2. ALL JOINTS TO BE RESTRAINED WITH MEGALUG RETAINER GLANDS.
3. MINIMUM COVER OVER WATER MAINS SHALL BE 3'–0" UNLESS SPECIFIC WRITTEN EXCEPTION BY NMB WATER IS ISSUED.

Date	Revisions	Appr. by	NMB WATER OF THE CITY OF NORTH MIAMI BEACH		
			TYPICAL CONNECTION TO EXISTING MAIN		
			Date: July 2019	Scale: N.T.S.	Fig: 217

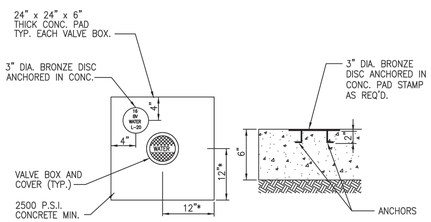

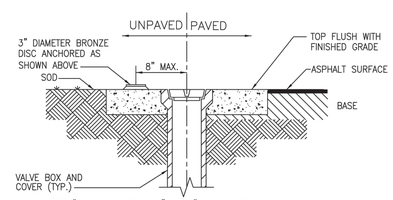

* FOR #2 VALVE BOXES; 15" FOR #3 VALVE BOXES

NOTES:
1. VALVE BOX AND EXTENSION (MDWASD #2) USE U.S. FOUNDRY #7615.
2. USE U.S. FOUNDRY #7630 VALVE BOX AND EXTENSION (MDWASD #3) FOR ALL OTHER VALVE APPLICATIONS.

Date	Revisions	Appr. by	NMB WATER CITY OF NORTH MIAMI BEACH		
			WATER VALVE COLLAR DETAIL		
			Date: July 2019	Scale: N.T.S.	Fig: 301

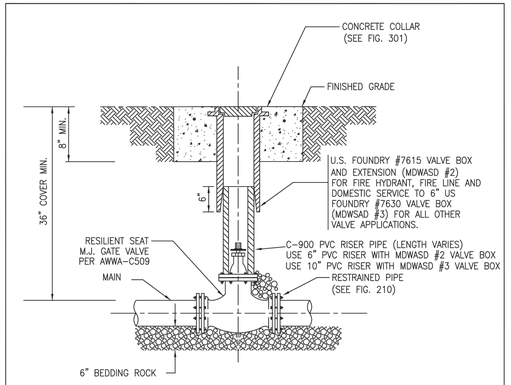

NOTES:
1. WHEN VALVE IS NOT LOCATED IN PAVEMENT, PLACE A WHITE PAVEMENT REFLECTOR MARKER IN THE DRIVE LANE, ADJACENT TO THE VALVE.
2. USE U.S. FOUNDRY #7630 VALVE BOX AND EXTENSION (MDWASD #3) FOR ALL OTHER VALVE APPLICATIONS.
3. GATE VALVES FOR USE ON 2–INCH THROUGH 10–INCH PIPELINES ONLY.
4. RESILIENT SEAT AND OTHER RUBBER TYPE PARTS SHALL BE FORMED OF A SYNTHETIC ELASTOMER (EPDM OR EQUAL) WHICH IS CORROSION AND CHLORAMINE RESISTANT.
5. OPERATOR EXTENSION SHAFT SHALL BE PROVIDED WHEN OPERATING NUT IS MORE THAN 48" BELOW TOP OF VALVE BOX.
6. ALL FERROUS SURFACES, INSIDE AND OUTSIDE, SHALL HAVE A FUSION–BONDED EPOXY COATING. ALL NUTS, BOLTS, WASHERS AND SPRINGS SHALL BE 316 STAINLESS STEEL.

Date	Revisions	Appr. by	NMB WATER OF THE CITY OF NORTH MIAMI BEACH		
			GATE VALVE AND BOX DETAIL		
			Date: July 2019	Scale: N.T.S.	Fig: 302

WILFORD ZEPHYR
Digitally signed by WILFORD ZEPHYR
Date: 2024.09.16 17:49:43 -04'00'

THIS ITEM HAS BEEN DIGITALLY SIGNED AND SEALED BY WILFORD ZEPHYR ON THE DATE ADJACENT TO THE SEAL.

PRINTED COPIES OF THIS DOCUMENT ARE NOT CONSIDERED SIGNED AND SEALED AND THE SIGNATURE MUST BE VERIFIED ON ANY ELECTRONIC COPIES.

WILFORD ZEPHYR LICENSE No 76036 STATE OF FLORIDA PROFESSIONAL ENGINEER
9–16–24

WATER DETAILS I
SCALE: N.T.S.

REVISIONS

NO.	DATE	DESCRIPTION

ZEPHYR ENGINEERING
WILFORD ZEPHYR, P.E.
HOLLYWOOD, FL
(786)302–7693
wzephyreng@gmail.com
CA#:31158

NEW RESIDENTIAL DEVELOPMENT
317 NE 168th ST
NORTH MIAMI BEACH, FL 33162

P.E.#:76036
DATE: 10/2/23
SCALE: N.T.S.
SHEET NO.: C7
7 OF 8
PROJECT NO.: 23–46

NOTES:

1. THE BACKFLOW PREVENTION ASSEMBLY MUST BE INSTALLED WITH MINIMUM HORIZONTAL CLEARANCE OF 18" MINIMUM TO 30" MAXIMUM, FREE FROM OBSTRUCTIONS IN ALL DIRECTIONS.
2. THE BACKFLOW PREVENTION ASSEMBLY SHALL BE ON THE APPROVED LIST OF FOUNDATION FOR CROSS CONNECTION AND HYDRAULIC RESEARCH CONTROL OF THE UNIVERSITY OF SOUTHERN CALIFORNIA (USC). CONTRACTOR TO PROVIDE MANUFACTURERS CERTIFICATION OF USC APPROVAL.
3. CURBSTOP, MUST BE ROTATED TO REMAIN.
4. GUARDPOSTS OR PROTECTIVE ENCLOSURE MAY BE REQUIRED DEPENDING ON SITE CONDITIONS. INSTALL PIPE SUPPORTS.
5. ALL ABOVE GROUND JOINTS TO BE FLANGED AND ALL UNDERGROUND JOINTS TO BE RESTRAINED WITH MEGALUG RETAINER GLANDS.
6. THIS SET UP COULD ONLY BE USED WHERE EXISTING SERVICE LINE IS AVAILABLE AND ON WHERE A FIRE HYDRANT IS NOT AVAILABLE FOR CONNECTION.
7. FOR 2" CONSTRUCTION METER, USE LOCK BACK IN PLACE OF TAILPIECE. SIZE OF EXISTING SERVICE LINE SHALL BE MINIMUM 2" DIAMETER.
8. LOCATING SERVICE LINE SHALL BE REMOTELY, MAPPING VALVE SHUT AND PLUGGED AFTER CONSTRUCTION OR WHEN PERMANENT METER IS INSTALLED FOR THE PROPERTY.

Date	Revisions	Approved by

CITY OF NORTH MIAMI BEACH

TYPICAL TEMPORARY CONSTRUCTION METER ASSEMBLY INSTALLATION

Date: July 2019 | Scale: N.T.S. | Fig: 306B

NOTES:

1. GUARD POSTS OR PROTECTIVE ENCLOSURE MAY BE REQUIRED DEPENDING ON SITE CONDITIONS.
2. DOUBLE CHECK DETECTOR ASSEMBLY SHALL BE FACTORY-ASSEMBLED, INCLUDING BYPASS METER.
3. ADDITIONAL GATE VALVE REQUIRED IF BACKFLOW DEVICE IS MORE THAN 10' AWAY FROM VALVE AT MAIN.
4. BACKFLOW PREVENTER ASSEMBLIES SHALL BE INSTALLED IN AN ACCESSIBLE LOCATION APPROVED BY NMB WATER LOCATIONS INSIDE BUILDINGS OR WITH OTHERWISE RESTRICTED ACCESS WILL NOT BE APPROVED.
5. ALL ABOVE GROUND JOINTS TO BE FLANGED AND ALL UNDERGROUND JOINTS TO BE RESTRAINED WITH MEGALUG RETAINER GLANDS.
6. ALL EXPOSED PIPING SHALL BE PAINTED OSHA SAFETY RED, "KOPPERS-KOVMILLION 314", OR APPROVED EQUAL AS PER N.F.P.A. 13.
7. TAMPER SWITCH SHALL BE PLACED ON ASSEMBLY AS PER N.F.P.A. 13.
8. REDUCED PRESSURE DETECTOR ASSEMBLY SHALL BE USED FOR HIGH HAZARDOUS APPLICATION (NEAR BODIES OF WATER).
9. THE ASSEMBLY MUST BE INSTALLED WITH MINIMUM HORIZONTAL CLEARANCE OF 18", FREE FROM OBSTRUCTIONS IN ALL DIRECTIONS.
10. THE BACKFLOW PREVENTION ASSEMBLY SHALL BE ON THE APPROVED LIST OF FOUNDATION FOR CROSS CONNECTION CONTROL, UNIVERSITY OF SOUTHERN CALIFORNIA (USC). CONTRACTOR TO PROVIDE MANUFACTURERS CERTIFICATION OF USC APPROVAL.
11. ALL BACKFLOW PREVENTION ASSEMBLIES SHALL BE FACTORY ASSEMBLED INCLUDING SHUT OFF VALVE AS REQUIRED BY USC FOUNDATION FOR CROSS CONNECTION CONTROL STANDARDS.
12. BYPASS METER SHALL BE THE NEPTUNE 5/8" X 3/4" T10E CODER METER WITH ITRON CONNECTOR.

Date	Revisions	Appr. by

NMB WATER OF THE PUBLIC SERVICES DEPARTMENT

FIRELINE DOUBLE DETECTOR CHECK VALVE ASSEMBLY

Date: July 2019 | Scale: N.T.S. | Fig: 308

NOTES:

1. THE ASSEMBLY MUST BE INSTALLED WITH MINIMUM HORIZONTAL CLEARANCE OF 18" MINIMUM TO 30" MAXIMUM, FREE FROM OBSTRUCTIONS IN ALL DIRECTIONS.
2. THE BACKFLOW PREVENTION ASSEMBLY SHALL BE ON THE APPROVED LIST OF FOUNDATION FOR CROSS CONNECTION AND HYDRAULIC RESEARCH CONTROL OF THE UNIVERSITY OF SOUTHERN CALIFORNIA (USC). CONTRACTOR TO PROVIDE MANUFACTURERS CERTIFICATION OF USC APPROVAL.
3. CURBSTOP, MUST BE ROTATED TO REMAIN.
4. GUARDPOSTS OR PROTECTIVE ENCLOSURE MAY BE REQUIRED DEPENDING ON SITE CONDITIONS. INSTALL PIPE SUPPORTS.
5. ALL ABOVE GROUND JOINTS TO BE FLANGED AND ALL UNDERGROUND JOINTS TO BE RESTRAINED WITH MEGALUG RETAINER GLANDS.
6. ALL EXPOSED PIPING SHALL BE PAINTED OSHA SAFETY RED, "KOPPERS-KOVMILLION 314", OR APPROVED EQUAL AS PER N.F.P.A. 13.
7. TAMPER SWITCH SHALL BE PLACED ON ASSEMBLY AS PER N.F.P.A. 13.
8. REDUCED PRESSURE DETECTOR ASSEMBLY SHALL BE USED FOR HIGH HAZARDOUS APPLICATION (NEAR BODIES OF WATER).
9. THE ASSEMBLY MUST BE INSTALLED WITH MINIMUM HORIZONTAL CLEARANCE OF 18", FREE FROM OBSTRUCTIONS IN ALL DIRECTIONS.
10. THE BACKFLOW PREVENTION ASSEMBLY SHALL BE ON THE APPROVED LIST OF FOUNDATION FOR CROSS CONNECTION CONTROL, UNIVERSITY OF SOUTHERN CALIFORNIA (USC). CONTRACTOR TO PROVIDE MANUFACTURERS CERTIFICATION OF USC APPROVAL.
11. ALL BACKFLOW PREVENTION ASSEMBLIES SHALL BE FACTORY ASSEMBLED INCLUDING SHUT OFF VALVE AS REQUIRED BY USC FOUNDATION FOR CROSS CONNECTION CONTROL STANDARDS.
12. BYPASS METER SHALL BE THE NEPTUNE 5/8" X 3/4" T10E CODER METER WITH ITRON CONNECTOR.

Date	Revisions	Approved by

NMB WATER OF THE CITY OF NORTH MIAMI BEACH

TYPICAL 3/4" TO 2" AND SMALLER REDUCED PRESSURE BACKFLOW ASSEMBLY INSTALLATION

Date: July 2019 | Scale: N.T.S. | Fig: 306A

NOTES:

1. POLYETHELENE SERVICE LINE TO BE CONTINUOUS FROM CORPORATION STOP TO METER BOX, NO COUPLINGS OR SPLICING WILL BE ARE PERMITTED.
2. KINKED OR CRIMPED PIPE AND OR TUBING SHALL BE REJECTED.
3. SERVICE LINES SHALL BE 36" COVER IN STATE D.O.T. RIGHTS-OF-WAY CONTINUOUSLY TO METER BOX. (SEE METER BOX DETAIL FOR CONNECTION.)
4. SERVICES SHALL HAVE 24" COVER IN TRAFFIC AREA AND 18" COVER IN NON-TRAFFIC AREA (CITY OF NMB & MIAMI-DADE COUNTY RIGHTS-OF-WAY).
5. WRAP NON-METALLIC SERVICE LINE WITH 10 GAUGE COPPER WIRE OR METALLIC DETECTOR TAPE. (SEE DETAIL FIG. 204)

Date	Revisions	Appr. by

NMB WATER OF THE CITY OF NORTH MIAMI BEACH

TYPICAL WATER SERVICE CONNECTION

Date: July 2019 | Scale: N.T.S. | Fig: 310

NOTES:

1. METER BOX SHALL BE SURROUNDED BY A 5' X 5' SQUARE POURED CONCRETE SLAB.
2. ALL MATERIALS TO BE SUPPLIED BY CONTRACTOR EXCEPT METER & COMPRESSION LOK-PAK (2), AS NOTED.
3. USE 5" BRASS NIPPLES (2) FOR 2" METER INSTALLATION; 2" X 1.5" REDUCING BUSHING & BRASS NIPPLE(2) FOR 1.5" METER INSTALLATION.
4. EXCEPT IN DOT STATE ROAD, MIN. 36" COVER REQUIRED.
5. NIPPLES TO BE INSTALLED PER MFG'R RECOMMENDATIONS ON COMPRESSION LOK-PAKS. NOTE 1.5" SLIDE CLEARANCE.

Date	Revisions	Appr. by

NMB WATER CITY OF NORTH MIAMI BEACH

TYPICAL 1 1/2" & 2" SERVICE & METER INSTALLATION

Date: July 2019 | Scale: N.T.S. | Fig: 313

NOTES:

1. U.S. FOUNDRY #76615 C.I. VALVE BOX (MDVASD #2)
2. USE TAPPING SADDLE (ALL STAINLESS STEEL OR EXPOXY-COATED DUCTILE IRON DUCTILE IRON W/STAINLESS STEEL STRAPS) FOR:
   1. IRON WATER MAINS OF 6" AND SMALLER
   2. PVC WATER MAINS
3. WILL BE REQUIRED WITH A BEND FITTING IF WATER MAIN CANNOT BE TAPPED HORIZONTALLY.

Date	Revisions	Appr. by

NMB WATER OF THE CITY OF NORTH MIAMI BEACH

TYPICAL 2" TAP TO EXISTING WATER MAIN

Date: July 2019 | Scale: N.T.S. | Fig: 317

WILFORD ZEPHYR

Digitally signed by WILFORD ZEPHYR
Date: 2024.09.16 17:50:07 -04'00'

THIS ITEM HAS BEEN DIGITALLY SIGNED AND SEALED BY WILFORD ZEPHYR ON THE DATE ADJACENT TO THE SEAL.

PRINTED COPIES OF THIS DOCUMENT ARE NOT CONSIDERED SIGNED AND SEALED AND THE SIGNATURE MUST BE VERIFIED ON ANY ELECTRONIC COPIES.

WILFORD ZEPHYR LICENSE No 76036 STATE OF FLORIDA PROFESSIONAL ENGINEER

9-16-24

WATER DETAILS II

SCALE: N.T.S.

REVISIONS

NO.	DATE	DESCRIPTION

ZEPHYR ENGINEERING
WILFORD ZEPHYR, P.E.
HOLLYWOOD, FL
(786)302-7693
wzephyreng@gmail.com
CA#:31158

NEW RESIDENTIAL DEVELOPMENT
317 NE 168th ST
NORTH MIAMI BEACH, FL 33162

P.E.#:76036

DATE: 10/2/23

SCALE: N.T.S.

SHEET NO.: C8
8 OF 8

PROJECT NO.: 23-46